DEPRAG
machines unlimited

Screwdriver Spindles electric

MINIMAT-ED Digital Electric Screwdriver, stationary

Straight handle design: torque ranges between 0.24 - 18 Nm

- **process reliable**
- **flexible**
- **functional variety**
- **documentation capable**
- **economical**
- **simple integration**

The new MINIMAT-ED is available in eight versions for torques between 0.24 to 18 Nm at speeds of 1500 rpm. The rates can be individually adjusted up to the maximum speed for each screwdriver type. The screwdriver spindles also benefit from a particularly slim design and are comfortably lightweight.

Use the interface 330E to connect to and communicate with a system controller when operating the stationary MINIMAT-ED screwdriver. We recommend integrating all required hardware components into a control cabinet.

D3195E 01.2024

Advantages

The **MINIMAT-ED screwdrivers** allow free programming of the screw tightening process. Within the power range of the selected tool, the torque value, speed, stand-by and direction of rotation can be adjusted individually to the assembly requirements.
The brushless electric motors provide low maintenance operation. They are ideally suited for the tightening of screws due to their outstanding dynamics and achievement of high peak torque values. The integrated torque control - based upon precise measurement of the motor current along with the evaluation of other dynamic factors - as well as angle measurement, allows accurate control of multistage screw-driving processes and documentation of the resulting values.
The **Interface 330E for signal and data exchange** between system controller (PLC) and **screwdriver control electronic** now enables the DEPRAG DPU series controllers and customer specific controllers to control MINIMAT-ED screwdrivers.

An I/O interface is already integrated in the Interface 330E (from software version 1.3 onwards) as a 25-pole SUB-D bushing to simplify control. Systems with older software versions can be upgraded to add the new functions with a software update.
The screwdriver is controlled via 24V inputs and outputs.

Torque accuracies of < 2% standard deviation and thus Cmk values of ≥ 1.67 with a tolerance of ± 10% can be reached * with MINIMAT-ED stationary screwdrivers. Statistically speaking, the error rate is less than 0.6 per one million screw assemblies.

*) under suitable process conditions

Description of functions

Screwdriving functions with Interface 106744B - Software 330 OS BASIC
There are five screwdriving programs (PG1 to PG5) available on the screwdriver for implementing individual screwdriving procedures; the process consists of a search run, torque, and angle screw assembly. There are also five loosening programs available (PG6 to PG10).
Enhanced functionality is always available by activating software 330 OS ADVANCED.

Enhanced functionality with Interface 106744C - Software 330 OS ADVANCED
MINIMAT-ED spindle screwdriver in combination with the software 330 OS ADVANCED – the cost-effective alternative for EC screwdriving system with AST sequence controller. Cost-effective and a wide range of features, e.g.,

- 15 different screwdriving programs can be stored
- Screwdriving programs can be freely compiled using the following screwdriving templates and commands:
  - assembly to torque
  - extended assembly to torque
  - assembly to angle
  - loosening to angle
  - friction value screwdriving (optional)
  - search run
  - save values
  - statistics
  - waiting time
- Speed reduction setting
- Extended end values
- Additional torque units

Control and parameter adjustment via I/O – for fast, simple integration
- Parameter setting and configuration via the web server integrated into the Interface 330E using a separate PC or notebook
- Screwdriver control via 24V inputs and outputs
- There are 4 inputs for program selection available: a start signal, additional signals, and status messages (OK/NOT OK/Ready)

Documentation
- Status messages: OK, NOT OK, READY
- No transfer of screwdriving curves
- Record screwdriver results from the last screw assembly

Integration into customer-specific control systems (PLC)
- Using features on the input/output interface application specific implementation of the control and visualisation can be carried out
- For a customer specific controller, the communication protocol is in the operating manual
- Request to the PLC: integrated PC functionality (when using the 24V inputs/outputs)

User-friendly
- Up to 10 users can gain access to the Interface 330E.

System set up and components

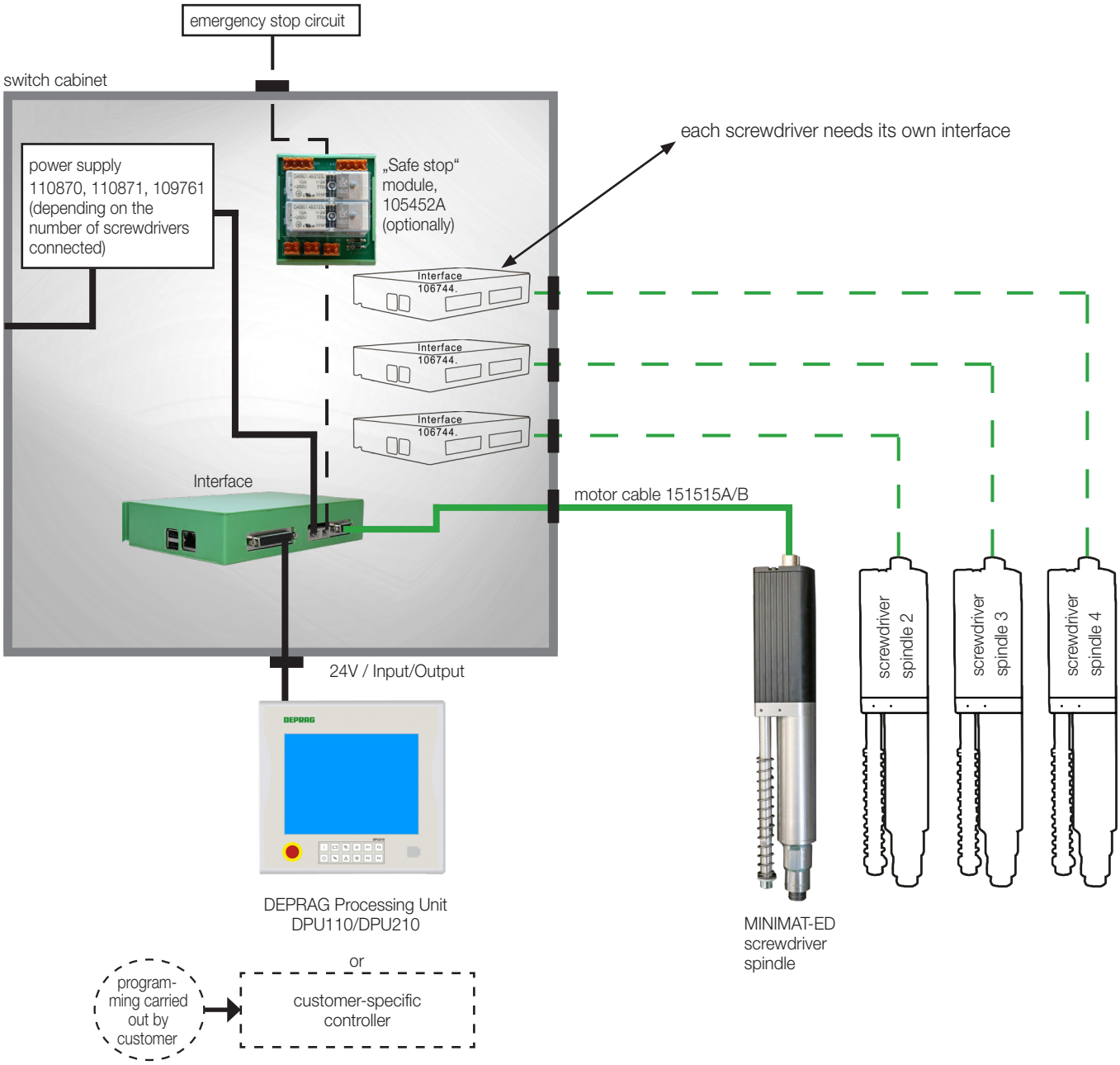

Plug & Play!
Simple integration with sample applications for the DEPRAG Processing Unit DPU series.

The hardware components required for the adjustment, control and power supply of the screwdriver are intended for integration into a control cabinet.

The screwdriver is connected to the interface 330E using a motor cable. The additional connection to the PLC uses a network cable (Ethernet) or the input/output interface. A power supply is also required and possibly the „safe stop“ module (optional components).

The necessary circuit diagrams for the electrical engineers are of course available from DEPRAG to enable integration of the components. The pre-assembled motor cable is connected directly to the plug on the interface 330E.

Alternatively, we can deliver a complete system including an already integrated and wired-up control cabinet.
Please contact us; we will be happy to provide you with a quotation.

System components

MINIMAT-ED Screwdriver spindle straight handle design, size 36	Type Part no.	330E36-0012 450000A	330E36-0018 450000B	330E36-0032 450000E	330E36-0048 450000C
Torque min.	Nm/in.lbs	0.24/2.1	0.36/3.2	0.64/5.66	1.0/8.85
Torque max.	Nm/in.lbs	1.2/10.6	1.8/15.9	3.2/28.3	4.8/42.5
Speed min.	rpm	150	150	120	90
Speed max.	rpm	1500	1500	1200	900
Diameter	mm/in.	36/1.4	36/1.4	36/1.4	36/1.4
Length	mm/in.	314/12.25	314/12.25	314/12.25	314/12.25
Weight	kg /lbs.	1.2/2.6	1.2/2.6	1.2/2.6	1.2/2.6
Line voltage (DC)	V	48	48	48	48
Internal hex drive DIN ISO 1173		F6.3 (1/4”)	F6.3 (1/4”)	F6.3 (1/4”)	F6.3 (1/4”)
Suitable inserting tools and connection parts with inserting end DIN ISO 1173		E6.3 (1/4”)	E6.3 (1/4”)	E6.3 (1/4”)	E6.3 (1/4”)

MINIMAT-ED Screwdriver spindle straight handle design, size 36	Type Part no.	330E36-0075 450000F	330E36-0110 450000G	330E36-0140 450000H	330E36-0180 450000I
Torque min.	Nm/in.lbs	1.5/13.3	2.2/19.5	2.8/24.8	3.6/31.9
Torque max.	Nm/in.lbs	7.5/66.4	11/97.35	14/123.9	18/159.3
Speed min.	rpm	50	40	25	20
Speed max.	rpm	560	390	290	220
Diameter	mm/in.	36/1.4	36/1.4	36/1.4	36/1.4
Length	mm/in.	356/13.9	356/13.9	356/13.9	356/13.9
Weight	kg /lbs.	1.5/3.3	1.5/3.3	1.5/3.3	1.5/3.3
Line voltage (DC)	V	48	48	48	48
Internal hex drive DIN ISO 1173		F6.3 (1/4”)	F6.3 (1/4”)	F6.3 (1/4”)	F6.3 (1/4”)
Suitable inserting tools and connection parts with inserting end DIN ISO 1173		E6.3 (1/4”)	E6.3 (1/4”)	E6.3 (1/4”)	E6.3 (1/4”)

Optional accessories for the screwdriver spindles		
Spring sleeve cpl.	Part no.	364672A
Spring sleeve cpl., with vacuum connection (in connection with finder, see brochure: Inserting tools D3320E)	Part no.	364672C
Screwdriver adapter	Part no.	9082435A
Depth control digital	Part no.	941177I
Depth control analog 10 mm	Part no.	908838D plus amplifier 813712

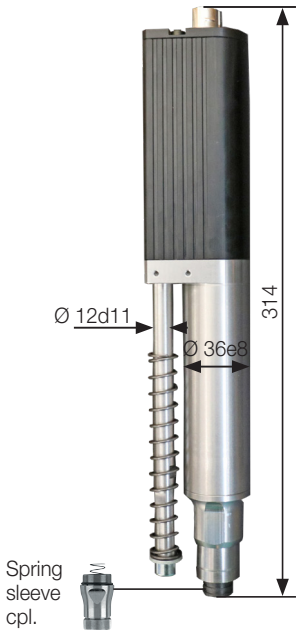

System components

Required components for the installation into a switch cabinet			
Motor cable length 2 m alternative Motor cable length 5 m Motor cable length 8 m Motor cable length 10 m	Part no. Part no. Part no. Part no.	151515A 151515B 151515C 151515D	To connect the screwdriver with the interface 330E.
Power supply single 240W-48V 2-fold 480W-48V 4-fold 960W-48V	 Part no. Part no. Part no.	 110870 110871 109761	Selection depends on the number of screwdrivers used. The different power supply options can be combined with one another.
Interface with standard software 330 OS BASIC	Type Part no.	330E 106744B *	The interface 330E allows simple adjustment of screwdriving programs, recording of result values via the integrated WEB server as well as control of the MINIMAT-ED spindle screwdriver. It has an Ethernet connection and an input/output interface. All settings can be carried out comfortably on the web interface (e.g., DPU, PC, notebook ..). The following languages are available: German, English, French, Swedish, Portuguese, Spanish, Slovenian, Polish, Finnish, Czech, Italian and Romanian. **Each screwdriver requires its own interface 330E** and is reached via its own individual IP address.
Interface with software 330 OS ADVANCED	Type Part no.	330E 106744C	

* only suitable for types 330E36-0012/-0018/-0032/-0048

Optional additional software	for types	330E36-0012/-0018/-0032/-0048		330E36-0075/-0110/-0140/-00180
suitable for Interface 330E	Part no.	with software 330 OS BASIC 106744B	with software 330 OS ADVANCED 106744C	
Upgrade to software 330 OS ADVANCED | activation key	Part no.	117244	-	-
DEPRAG Friction Value Process | activation key	Part no.	-	201820	201820
DEPRAG Cockpit On Premise 1/5/10/20/50 licenses	Part no.	19930/19932/19933/19934/19935		19930/19932/19933/19934/19935
DEPRAG Cockpit Cloud (integrated in myDEPRAG). Use the advantages of Cockpit Cloud now exclusively via myDEPRAG.				

For more details to the software products, please see brochure D3900E.

Optional component for the installation into a switch cabinet			
„Safe stop“ module 	Part no.	105452A	The “safe stop” module disconnects the power supply to the screwdriver. The power supply to the interface 330E remains connected. Disconnection is carried out on two channels with monitoring contacts, so that Performance Level e in accordance with EN ISO 13849-1 is fulfilled (functional safety). Each “safe stop” module can be used to protect up to three screwdrivers. After triggering the safety-cut off around 10s is needed for the screwdriver to return to operational readiness.
Patch cable	Part no.	831902	Connection Interface 330E - PC

Our software solutions undergo continuous improvements. We recommend that you regularly update your software. In this way you will always receive the most up-to-date security updates, upgraded features and drivers. With the most current version of the software you can be sure that your device is optimally prepared for Industry 4.0.

User interface web server

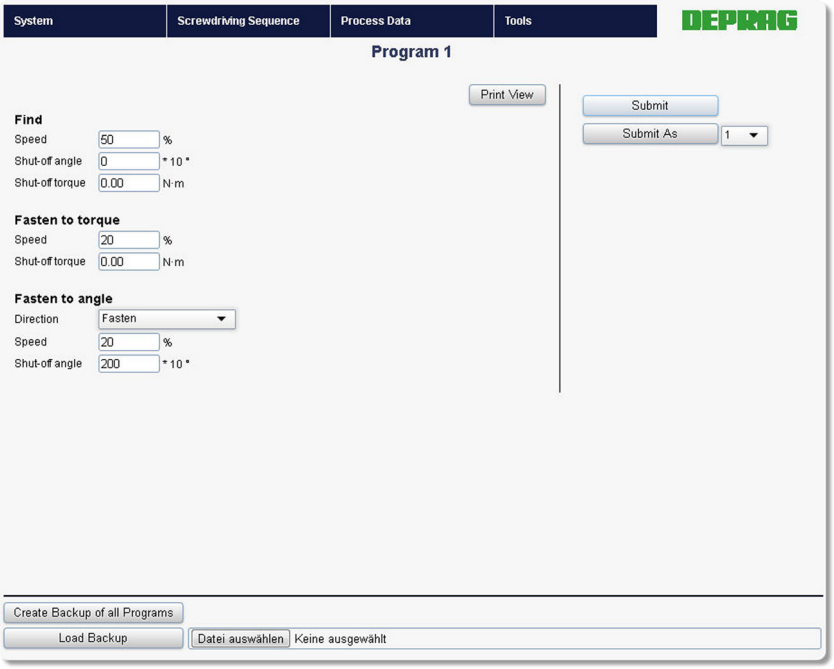

Program set-up - OS BASIC

Program set-up - OS ADVANCED

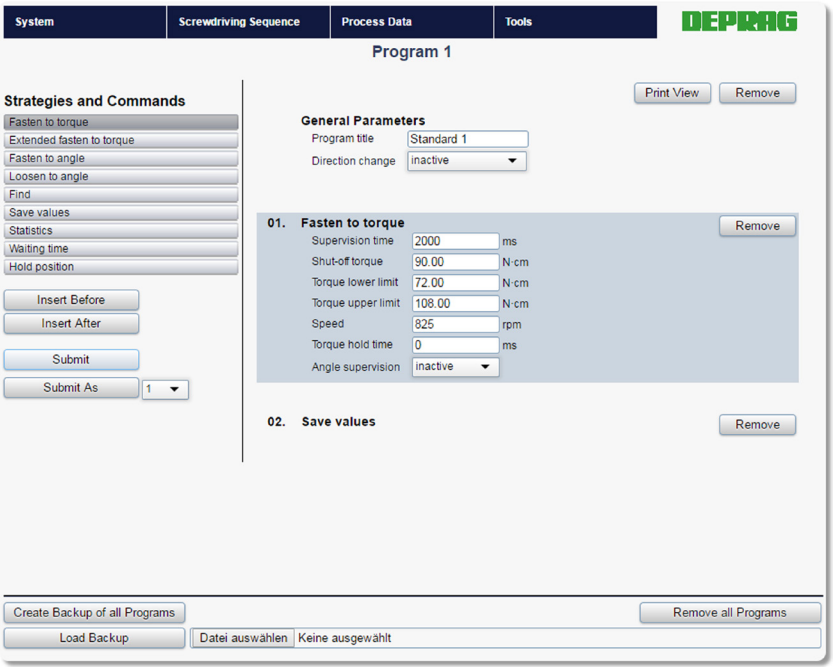

Comparison of DEPRAG stationary screwdriving systems

One essential cornerstone for the development of top quality, error-free production is the **selection of the right screwdriving spindle for integration into your assembly system.** Play it safe!

Our specialists are happy to advise you in your search for the most suitable tool and the configuration of your complete system.

DEPRAG screwdriving solutions are available for any application.

	MINIMAT-E **screwdriving system – the stationary electric screwdriver with mechanical shut-off clutch**	**MINIMAT-ED** **the electronic screwdriving system with no external screwdriving sequence controller**		**MINIMAT-EC** **the flexible EC screwdriving system meeting the highest requirements with sequence controller ASTxx**
	The MINIMAT-E with mechanical shut-off clutch for the realization of screwdriving solutions without an air supply; this is an alternative to stationary pneumatic screwdrivers.	The DEPRAG DPU series controllers can be used to control the MINIMAT-ED screwdriver in combination with the Interface 330E for signal and data exchange between the system controller (PLC) and the control electronics of the screwdriver. In combination with a DPU, single and multi-channel EC screwdriving solutions can be integrated into the controller concept of complete systems at low cost.		The integrated torque measurement based on power consumption as well as an angle measurement enables accurate control and regulation of screw tightening, as well as documentation of essential processing parameters and guarantees utmost precision; thereby allowing the realization of several different tightening parameters within one assembly cycle.
Characteristics		**in combination with Interface 330E and standard software 330 OS BASIC**	**in combination with Interface 330E and software 330 OS ADVANCED**	
Tightening and shut-off via torque	✓	✓	✓	✓
Tightening and shut-off via torque with angle control	✗	✗	✓	✓
Tightening and shut-off via angle	✗	✓	✓	✓
Tightening and shut-off via angle with torque control	✗	✗	✓	✓
Loosening and shut-off via angle	✗ *	✓	✓	✓
Extended screwdriving strategies, e.g., friction dependent screw assembly	✗	✗	✓	✓
Parameter adjustment of screwdriving sequences	✗	✓	✓	✓
Creation of screwdriving sequences	✗	✗	✓	✓
Graphic recording	✗	✗	✗	✓
Communication interfaces	✗ **	✓	✓	✓
Storage / documentation / analysis	✗	✓	✓	✓

* Option for loosening with shut-off via signal

** I/O interface available for PLC

DEPRAG SCHULZ GMBH u. CO. KG
P.O. Box 1352 | D-92203 Amberg
Carl-Schulz-Platz 1 | D-92224 Amberg
Phone: +49 9621 371-0 | Fax: +49 9621 371-120
www.deprag.com | info@deprag.de

CERTIFIED AS PER DIN EN ISO 9001

© DEPRAG. All rights and technical alterations reserved - Fri